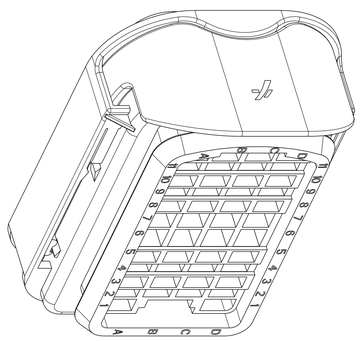

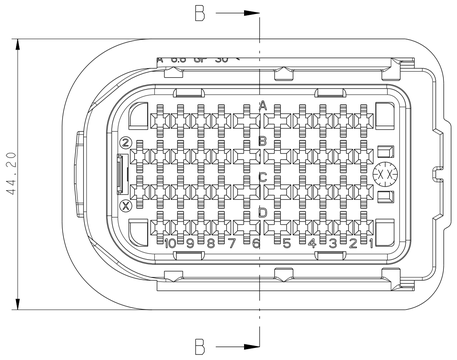

IMPLANTATION DES ALVEOLES
CAVITIES LAY OUT

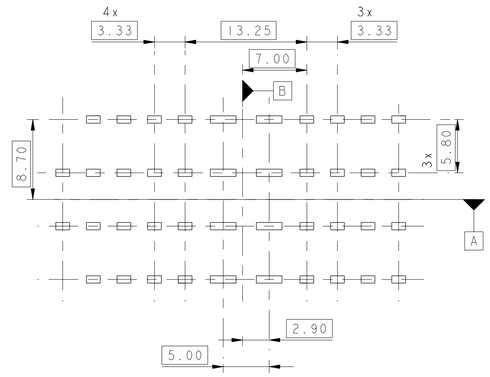

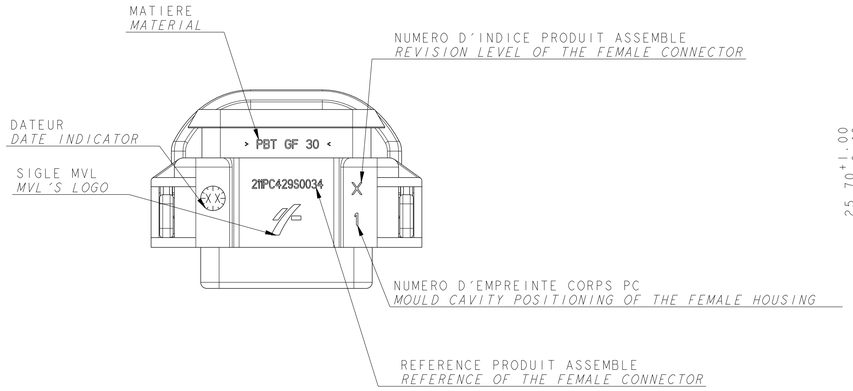

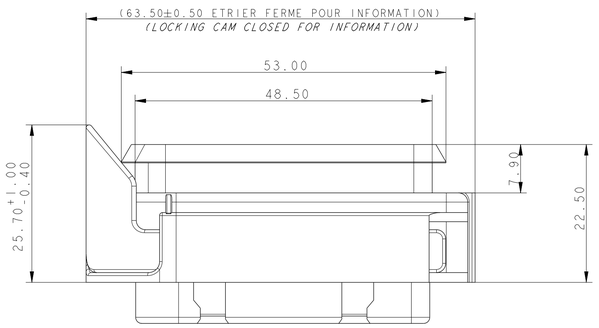

B-B

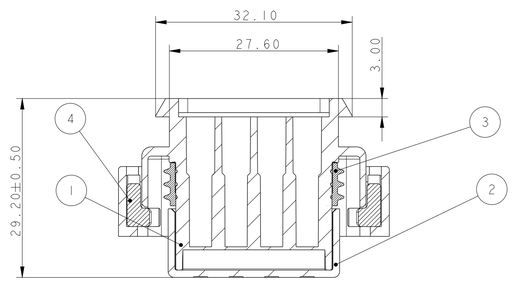

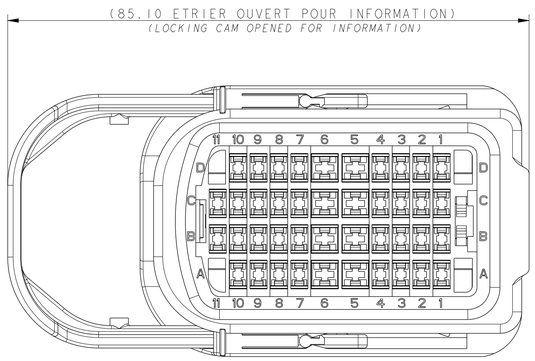

Rep. *Item*	DESIGNATION *DESCRIPTION*	REFERENCE MVL *MVL'S REFERENCE*	MATIERE *MATERIAL*	COULEUR *COLOR*	REFERENCE *REFERENCE* (MVL)	REVISION *REVISION* (MVL)	REFERENCE *REFERENCE* (DELPHI)	REVISION *REVISION* (DELPHI)
4	ETRIER *SLIDER DEVICE*	211 M 0 119	PA 6.6 30% FV *PA 6.6 30% GF*	NOIR *BLACK*	211 PC 42 9 S 0 034	B	10811874	01
3	JOINT INTERFACIAL *MATING SEAL*	211 M 8 121	SILICONE *SILICON*	GRIS *GREY*				
2	GRILLE AVANT *FRONT GRID*	211 M 0 118	PBT 15% FV *PBT 15% GF*	NOIR *BLACK*				
1	CORPS *FEMALE HOUSING*	211 1 0 070	PBT 30% FV *PBT 30% GF*	NOIR *BLACK*				

C

TYPE CLIP *FEMALE TERMINAL TYPE*	GAMME *RANGE*	REFERENCE *REFERENCE*
2.8 x 0.8 SICMA 3	1 à 2	211 CC 3 S XXX0
2.8 x 0.8 SICMA 2	1 à 3	211 CC 3 S XX20
1.5 x 0.8 SICMA 3 PLUS	1 à 2	211 CC 2 S XXX0P
1.5 x 0.8 SICMA 2	1 à 2	211 CC 2 S XX20

CLIPS UTILISABLES
AVAILABLE FEMALE TERMINALS

LE PORTE-CLIPS EST LIVRE AVEC L'ETRIER EN POSITION OUVERTE.
THE FEMALE CONNECTOR IS DELIVERED WITH THE SLIDER DEVICE IN OPEN POSITION.

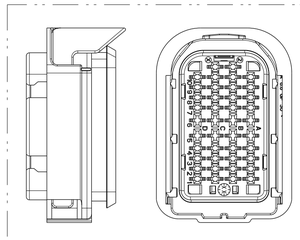

SCALE 1:1

ECN-NO. *NUMERO ECN*	POSITION *POSITION*	CHANGE DESCRIPTION *MODIFICATION*
-	-	-
-	-	-
-	-	-
-	-	-
-	-	DELPHI P/N EDDED

PRODUCT SPEC. *SPECIF. PRODUIT* -
PACKAGING SPEC. *SPECIF. EMBALAGE* -
APPLICATION SPEC. *SPECIF. APPLICATION* -

COPYRIGHT DELPHI CORPORATION AND/OR ITS AFFILIATES. ALL RIGHTS RESERVED. REVISED
THIS DRAWING IS THE PROPERTY OF DELPHI CORPORATION AND CONTAINS DELPHI CONFIDENTIAL INFORMATION. THE REPRODUCTION, DISTRIBUTION AND UTILIZATION OF THIS DOCUMENT OR ITS RELATED CAD DATA DATA, AS WELL AS COMMUNICATION OF ANY CONTENT TO OTHERS, WITHOUT EXPRESS AUTHORIZATION, IS PROHIBITED.
CE PLAN EST LA PROPRIETE DE DELPHI CORPORATION ET CONTIENT DES INFORMATIONS DELPHI CONFIDENTIELLES. LA REPRODUCTION, LA DISTRIBUTION ET L'UTILISATION DE CE DOCUMENT OU DE SES DONNEES INFORMATIQUES CAO, AINSI QUE LA COMMUNICATION DE SON CONTENU A AUTRUI, SANS AUTORISATION EXPRESSE, EST INTERDITE.

TOLERANCES *TOLERANCES* ±0.3 ±2°
MATERIAL : *MATIERE :* SEE NOTE
SURFACE FINISH *ETAT DE SURFACE* -
COUNTERPART N° *CONTRE PARTIE N°* 211PL429S0034
COLOUR : *COULEUR :* SEE NOTE
DO NOT MEASURE DRAWING *NE PAS PRENDRE DE COTES*
TOOL NO. *OUTIL N°* -
ECO Loc. Code *CODE B.E.* FE

DELPHI PACKARD ELECTRICAL/ELECTRONIC ARCHITECTURE EPERNON, FRANCE

ISO PROJECTION *PROJECTION ISO*
DIMENSION IN MILLIMETERS *DIMENSIONS EN MILLIMETRES*

	DATE	NAME *NOM*
CREATED BY *CREE PAR*	27/11/2003	NOEL
MODIFIED BY *MODIF. PAR*	2013/04/23	F FAURIE
CHECKED BY *VERIF. PAR*	2013/04/23	S LACOTE
APPROVED BY *APPR. PAR*	2013/04/23	Pascal MENARD

TITLE *DESIGNATION* FEMALE CONNECTOR
PROJECT *PROJET* 42 WAY DOOR TO BODY CONNECTOR
ESR NO. *NUMERO ESR* FRA-2086
KAT. NO. *NUMERO CAT.* -
FILE NAME *NOM DE FICHIER* 211FT0419
DOCUMENT UNDER PDS CONTROL *DOCUMENT GERE SOUS P.D.S.* NO MODIFICATION ALLOWED OUTSIDE *PAS DE MODIFICATION EN DEHORS*

DRAWING NUMBER *REF. PLAN* 211FT0419
REV. *IND.* C
STATE *ETAT* SERIAL RELEASED
PART NUMBER *REF. ARTICLE* See Table
REV. *IND.* -

CAD SYSTEM *FORMAT* pro / eng.
UNIT SIZE *FORMAT* A1
APPROVAL LEVEL *NIV. D'APPROBATION* -
SHEET *FEUILLE* 1 of 1 *sur* 1
SCALE *ECH.* 2:1

EUR C04.112 F29